Standard ULTIMA IP40

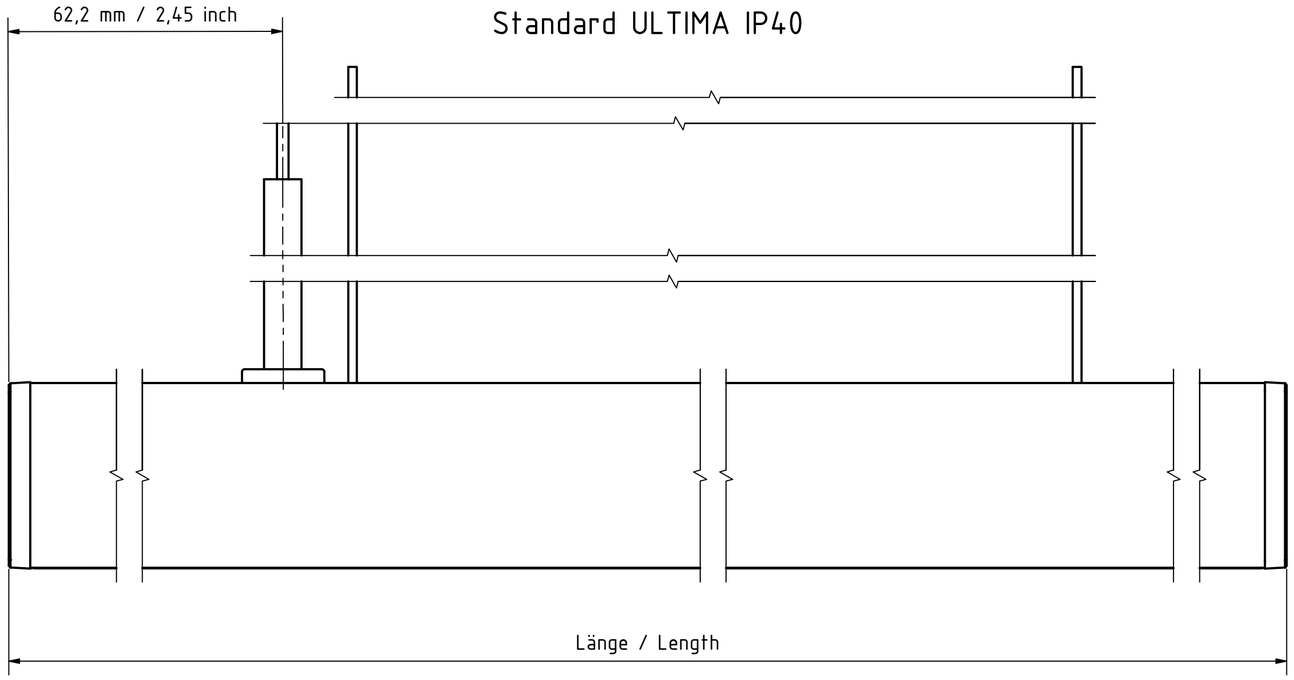

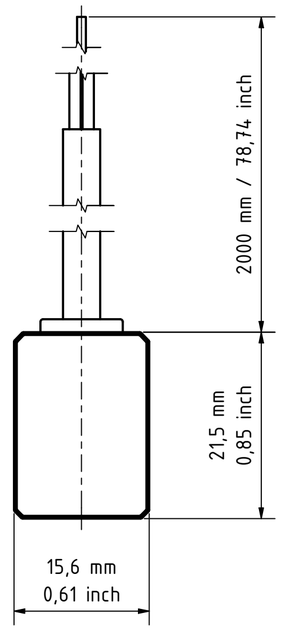

Pendel abgehängte Decke / Betondecke
Pendant False Ceiling / Concrete Ceiling (PC)
13000023/-SCH / 13000286/-SCH

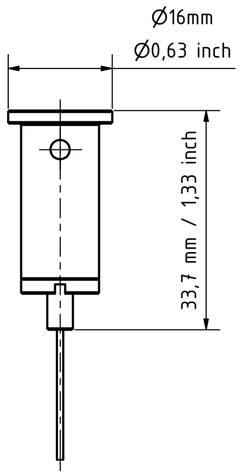

Pendel Rasterdecke
Pendant Grid Ceiling (PG)
13000023/-SCH / 13000286/-SCH / 13000406-W/-SCH

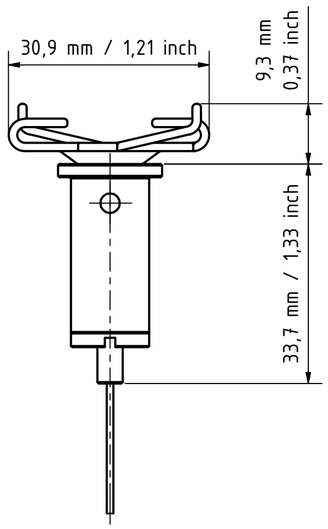

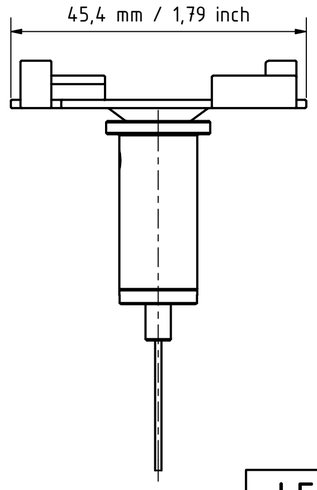

VarioCable:

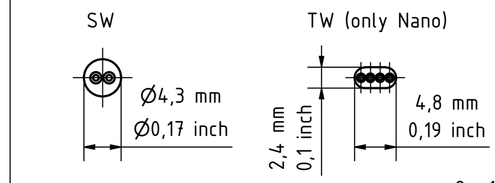

Toleranzen der Leuchtenlängen / Tolerances luminaire lenghts:

Toleranz / Tolerance: ± 1 mm / 0.04 inch

Werkstoffe und Farb-Varianten / Material and Color options:

- E6/C0 / 15-20µm / Aluminium Silber / silver
- E6/C35 / 15-20µm / Aluminium Schwarz / black

LED LINEAR™
A Fagerhult Group Company

Material edges according to DIN ISO 13715

	Date	Name
Drawn	25.09.2026	Zeyen
Controlled	25.09.2026	Weßels
Approved		

Refer to protection notice ISO 16016

Index	Revision	Date	Name

General tolerances DIN ISO 2768-1-m DIN ISO 2768-2-K

Material:

Art.-No.:

Title:
ULTIMA IP40 Pendant

Drawing number:
VT 413.0021

Surface details acc. to DIN ISO 1302 in Ra/Rank 2

Scale 2 : 1

Sheet 1/2
A2

Standard ULTIMA IP40

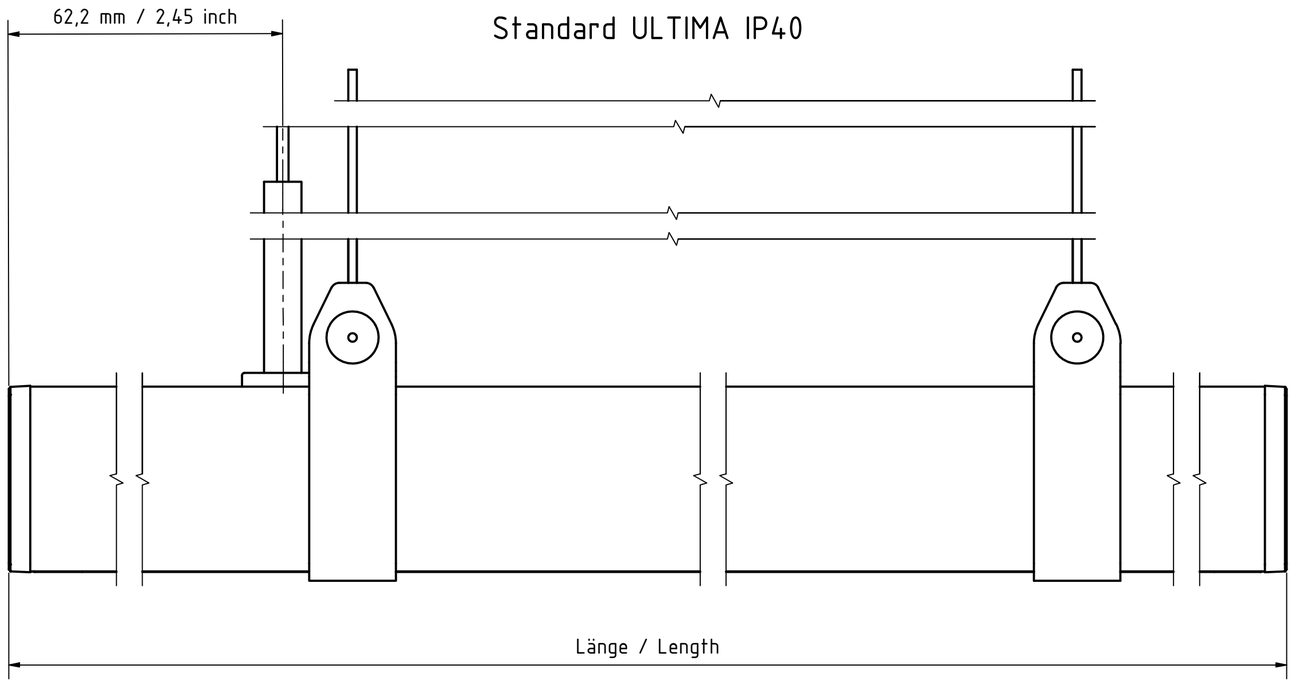

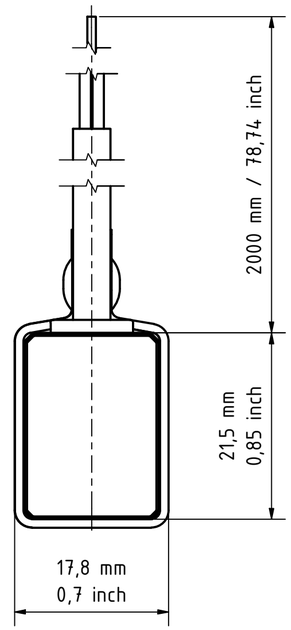

Pendel abgehängte Decke / Betondecke
Pendant False Ceiling / Concrete Ceiling (PSL / PSA)
13000023/-SCH / 13000286/-SCH
13000409 (L) or 13000427 (A)

Pendel Rasterdecke
Pendant Grid Ceiling (PGL / PGA)
13000023/-SCH / 13000286/-SCH / 13000406-W/-SCH
13000409 (L) or 13000427 (A)

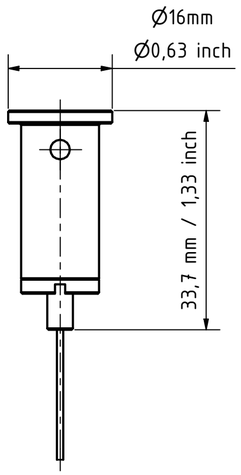

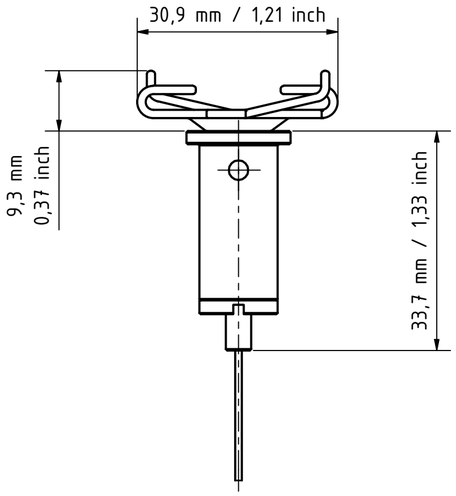

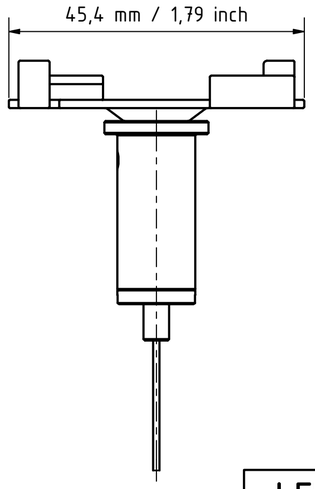

VarioCable:

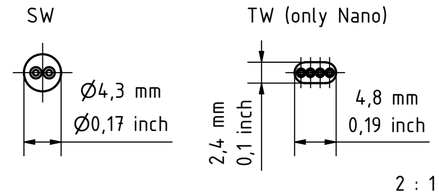

Toleranzen der Leuchtenlängen / Tolerances luminaire lenghts:

Toleranz / Tolerance: ± 1 mm / 0.04 inch

Werkstoffe und Farb-Varianten / Material and Color options:

- E6/C0 / 15-20µm / Aluminium Silber / silver
- E6/C35 / 15-20µm / Aluminium Schwarz / black

LED LINEAR™
A Fagerhult Group Company

Material edges according to DIN ISO 13715

	Date	Name
Drawn	25.09.2026	Zeyen
Controlled	25.09.2026	Weßels
Approved		

Refer to protection notice ISO 16016

General tolerances DIN ISO 2768-1-m DIN ISO 2768-2-K

Material:

Art.-No.:

Title:
ULTIMA IP40 Pendant

Drawing number: VT 413.0021

Surface details acc. to DIN ISO 1302 in Ra/Rank 2

Scale 2 : 1

Sheet 2/2 A2

Index	Revision	Date	Name